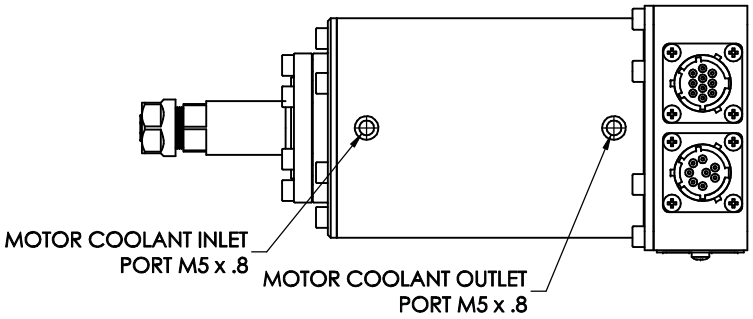

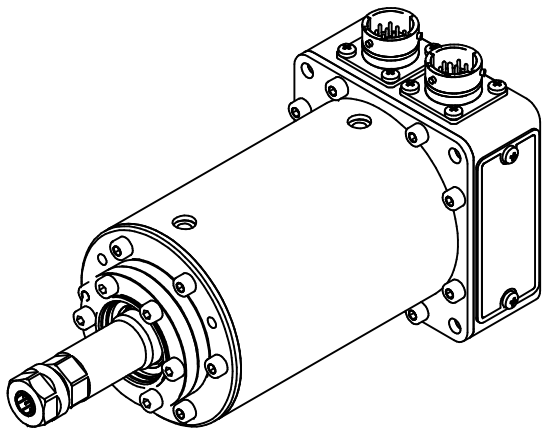

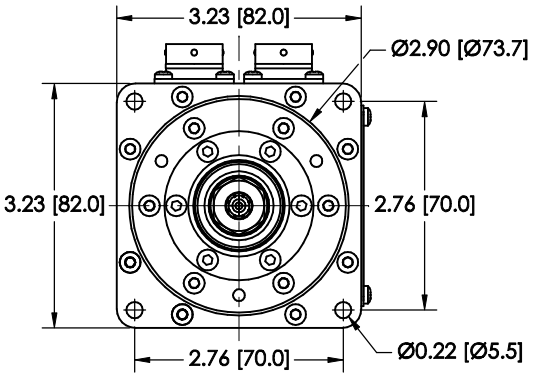

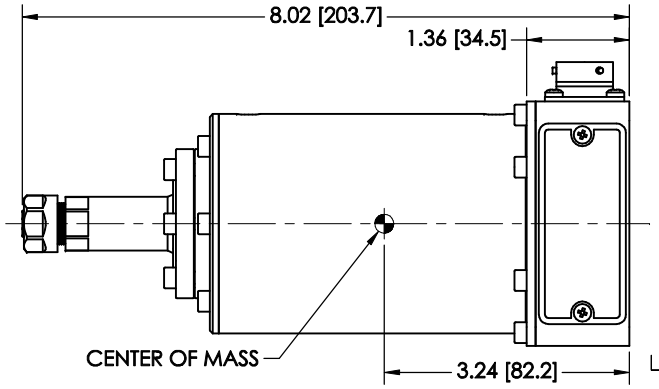

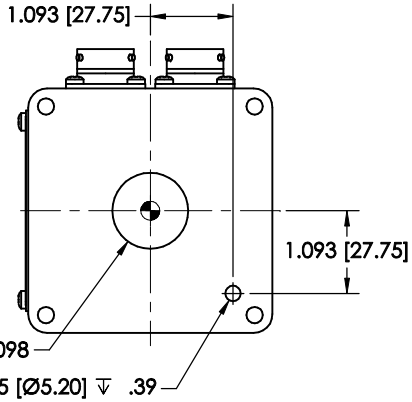

NOTE:
(1) TOOL WEIGHT: 6.0 lbs. (2.8 kg)

Rev	Description	Date
1	INITIAL RELEASE	5-23-06
2	—	—
3	—	—
4	—	—
5	—	—
6	—	—
7	—	—

All Dimensions are Before Plating Unless Specified.
No Forming Heliicoil Taps
Surface Finish on Unspecified Surfaces to be 63 Micro Inches
Drawing Per ASME Y14.5M-1994
Break Edges 0.015 Max
Part to be Free of Burrs

Tolerances

Angle:	±1.0°
X.XXX:	±0.003
X.XX:	±0.01
X.X:	±0.03

Drawn By: WEBB
Elec. Eng: N/A
Mech Eng: ERLBACHER
Scale: NOT TO SCALE
Drawing Units: Inches [mm]
Material: N/A
File Name: SM3002-2.dwg

PUSHCORP, INC.
P.O. Box 181915, Dallas, Texas
Phone: (972) 840-0208 FAX: (972) 840-1046

SM3002

Size: B
Part/Asm Number: ASM01542-1
Cage Number: 011C8
Page: 1 Of: 1